Robot setup

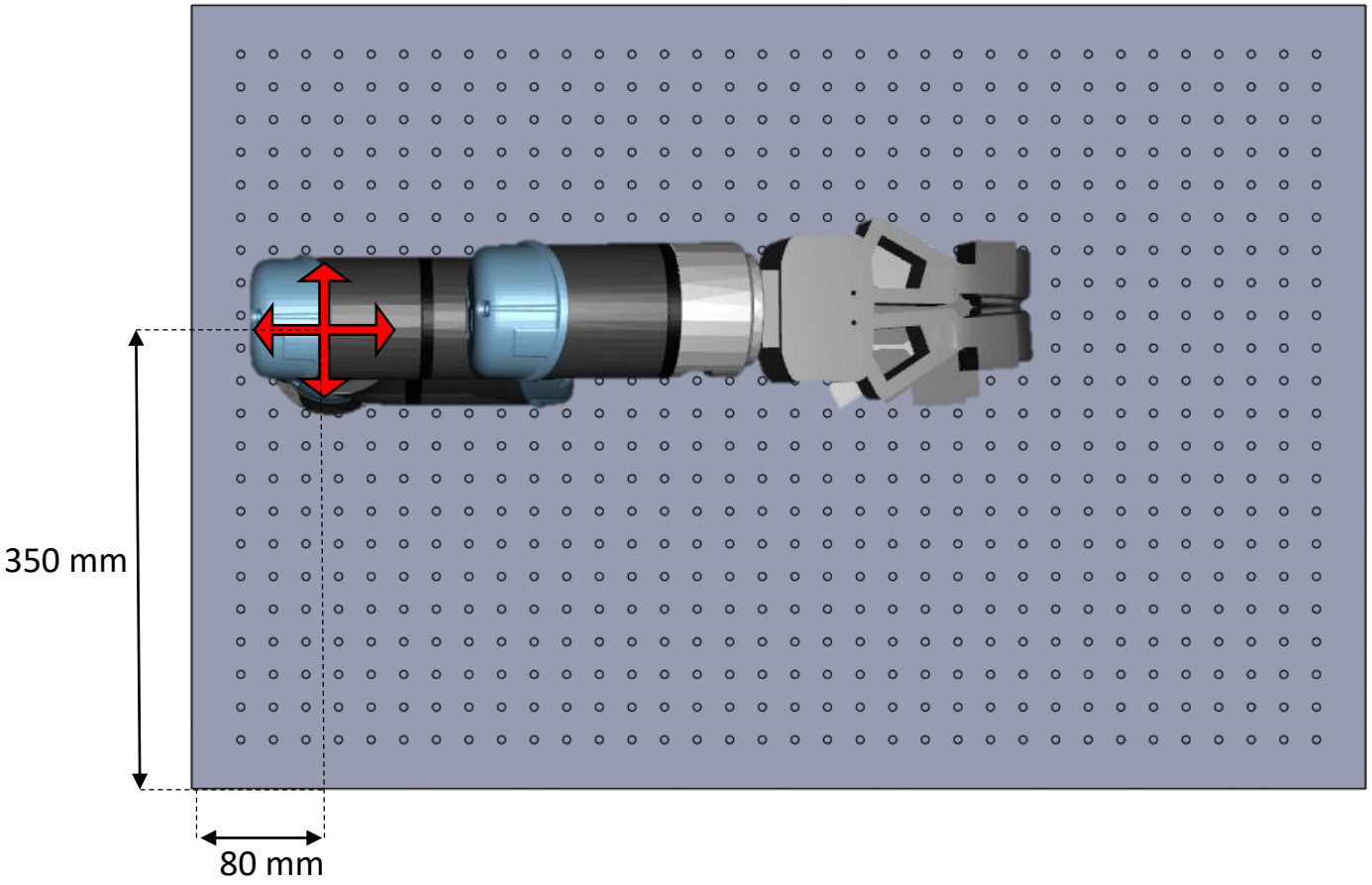

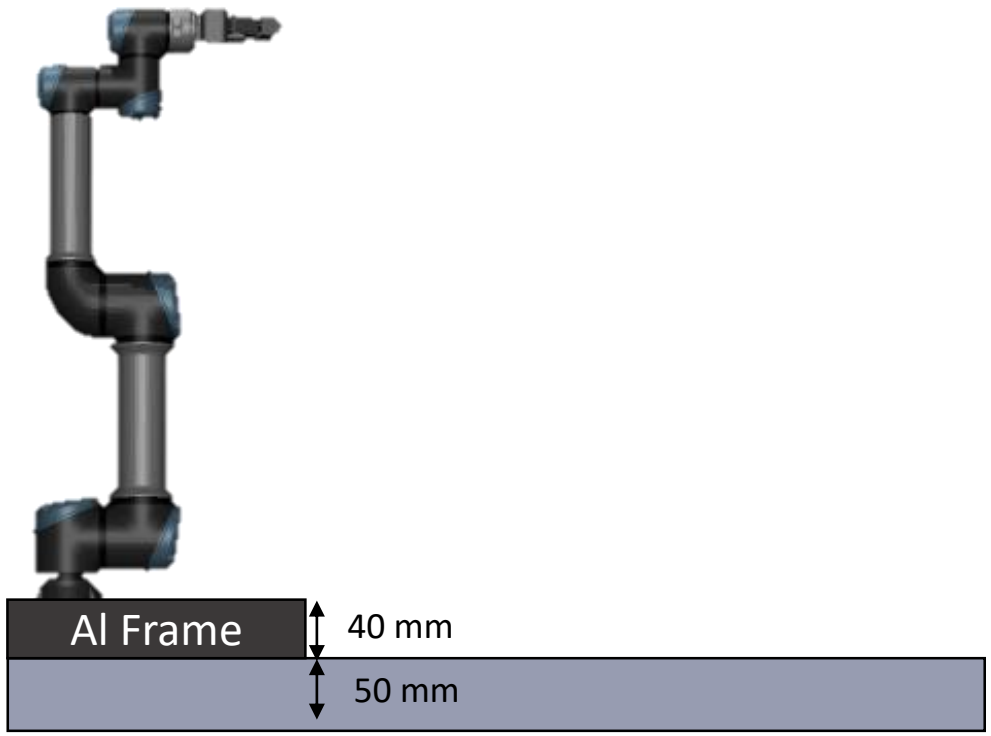

Robot Flange

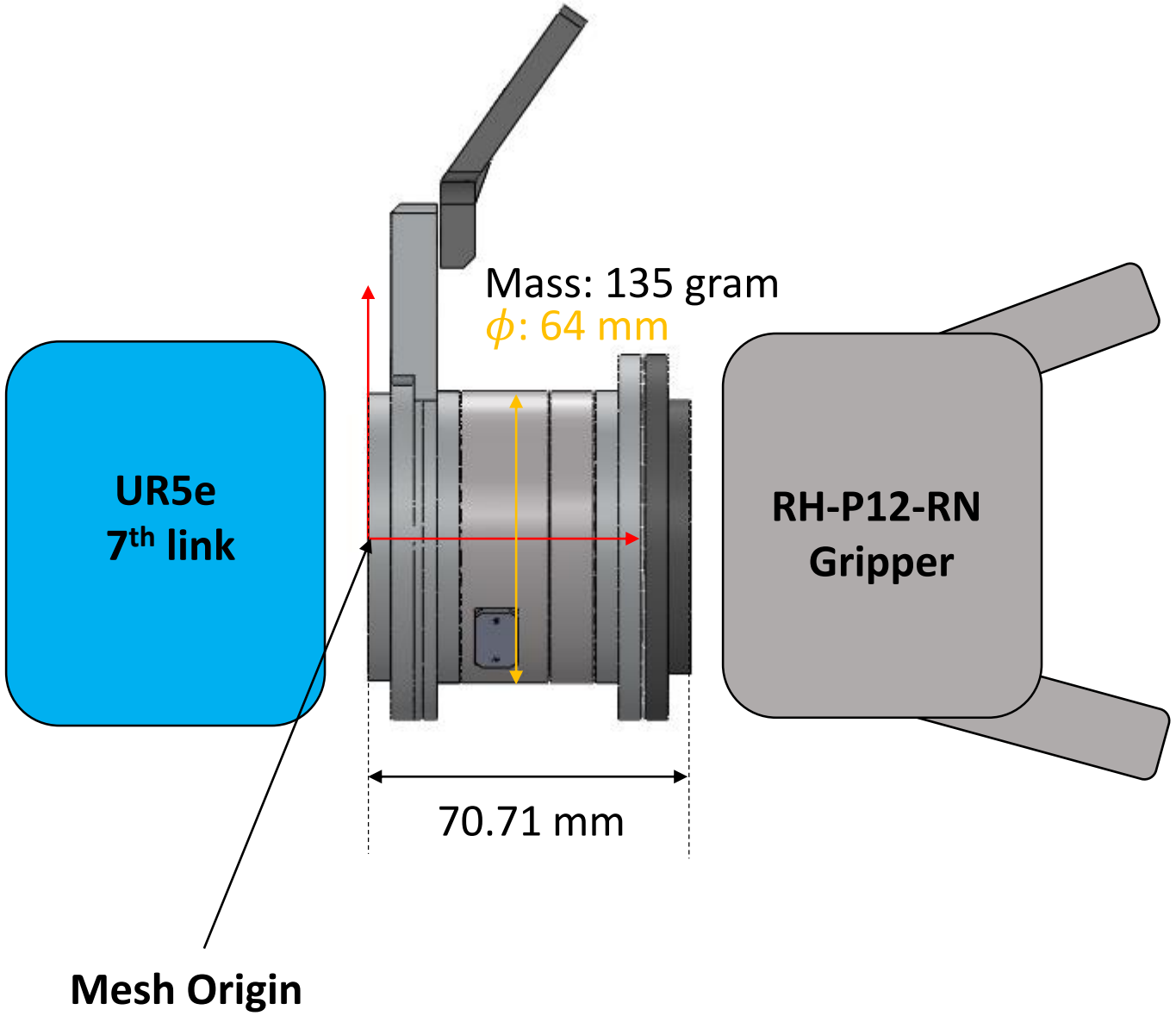

Mesh files specification

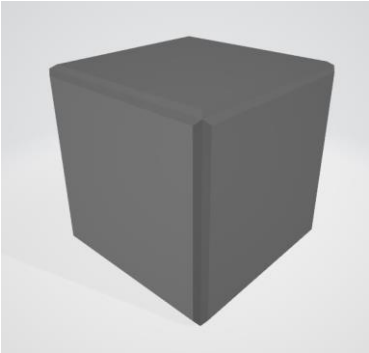

Cube_30.STL
Volume: 30 mm x 30 mm x 30 mm
mass: 13.5 gram

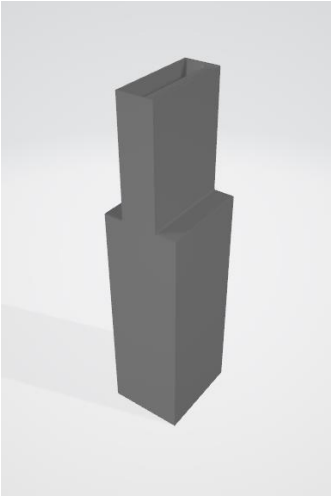

USB_stick.STL
Volume: 10 mm x 10 mm x 45 mm
mass: 30 gram

Peg in Hole

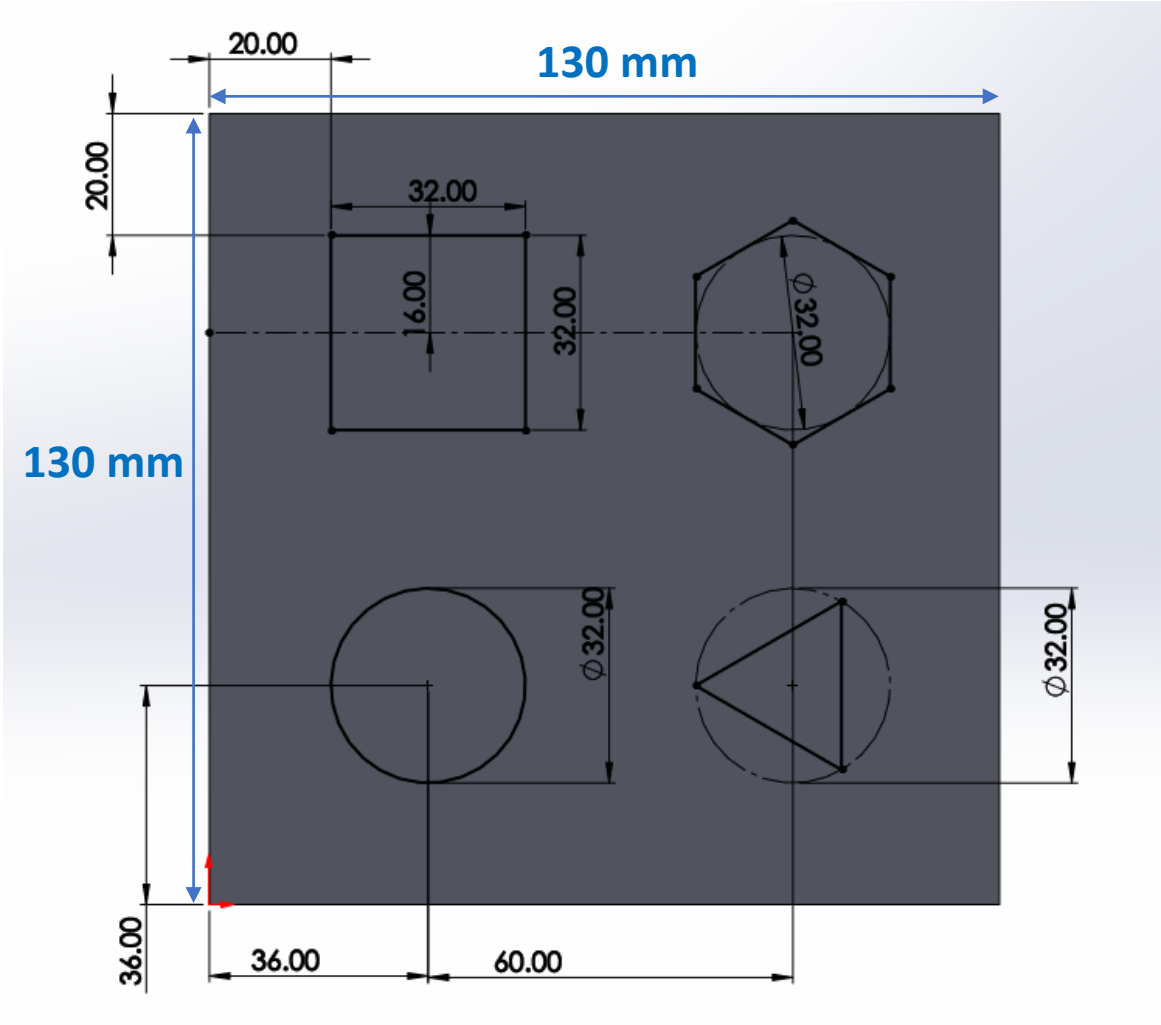
20.00
130 mm
20.00
32.00
16.00
32.00
⌀32.00
130 mm
⌀32.00
⌀32.00
36.00
36.00
60.00

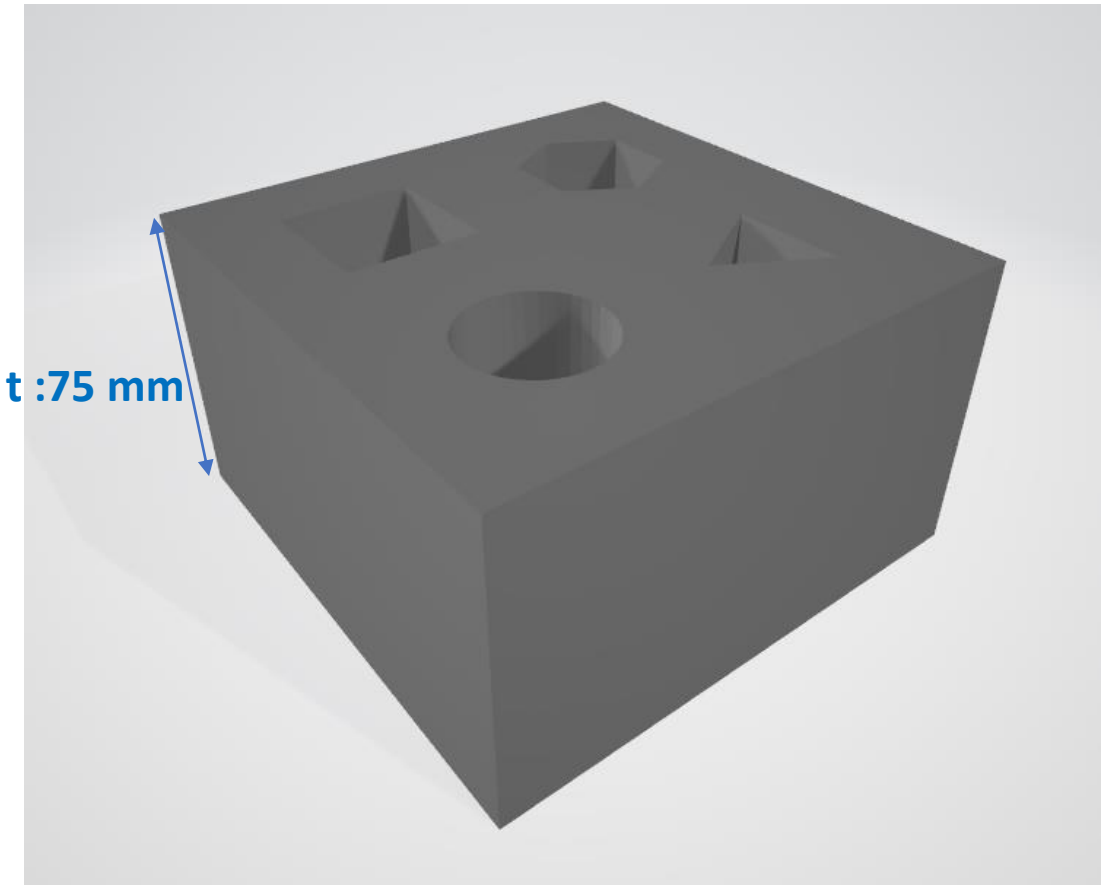
t :75 mm